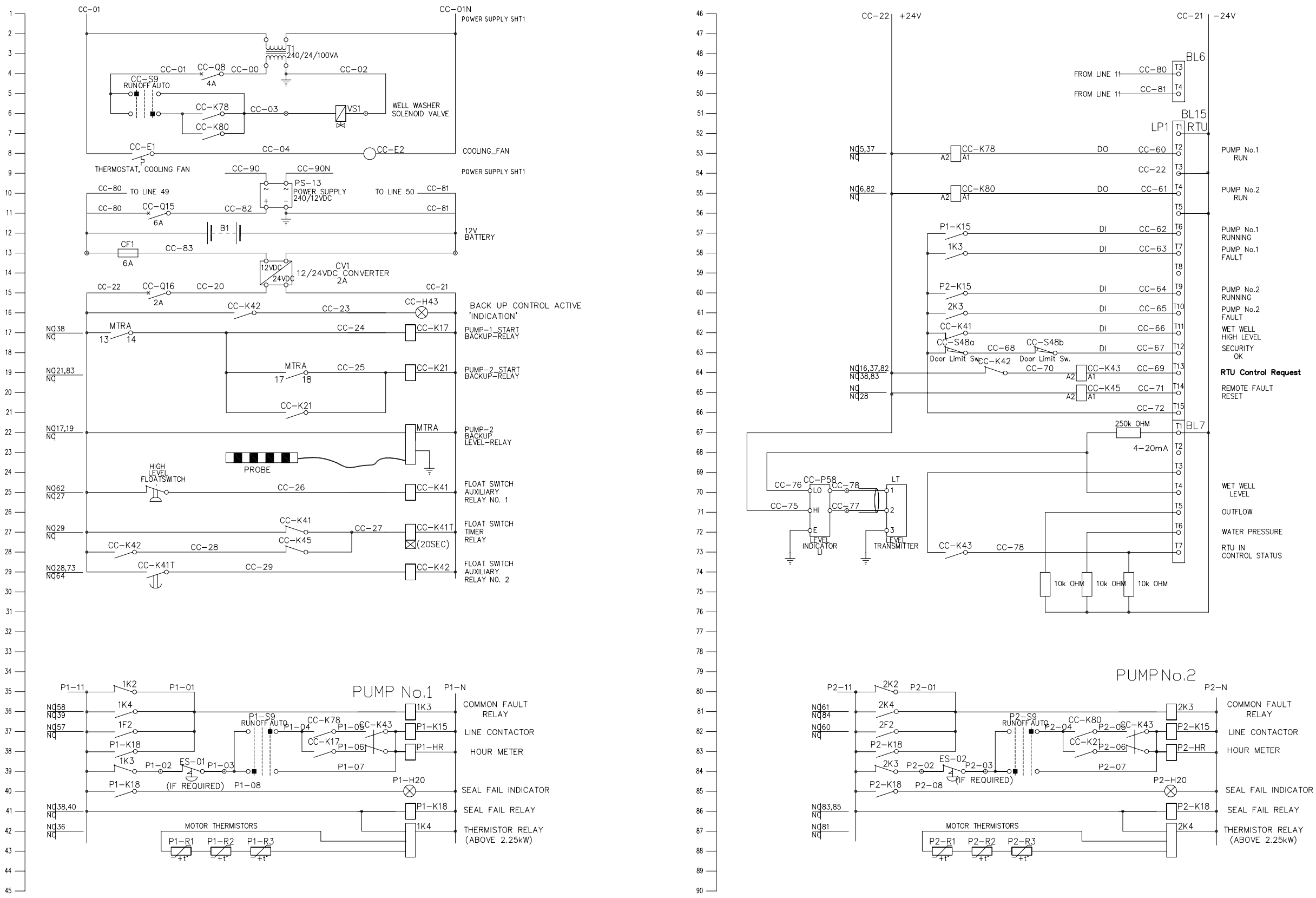

DRAWN BY: GoldCoastWater	PROJECT OFFICER	DESIGN NOT TO BE AMENDED WITHOUT REFERENCE TO DESIGN PROJECT OFFICER				BAR SCALES	
	DESIGN/DRAWN LW/GLH	E	Terminal 3 on BL15 changed to CC-21 from CC-22	LW	12/01/07		
	DWG CHKD	D	CC-H43 MODS. HOUR RUN METERS ADDED	LW	28/06/05	PROJECT FILE NAME G:BUS.REC./06-07-832	
		C	CC-Q15 changed to 6A	LW	09/04/05		
	DES CHKD	B	DRAWING NUMBER WAS 03-07-802	LW	20/04/04	RECORDS FILE NO. / SURVEY FOLDER NO.	
		A	12/24V POWER SUPPLY REVISIONS	LW	07/03/04		
TELEPHONE: (07) 5581 6661	DATE	APPROVED	A ADDED SEAL FAIL TRIP	LW	07/03/04	SURVEYED BY / DATE / SURVEY CHKD	DO NOT SCALE, USE FIGURED DIMENSIONS ONLY
			No. AMENDMENT		APPROVED		

Gold Coast City Council
GOLD COAST CITY COUNCIL
PO BOX 5042, GOLD COAST MC 9729

GoldCoastWater

ACCEPTED | FOR PROJECT ENQUIRIES REFER ..... EXT ..... | DATE

SCHEMATIC WIRING DIAGRAM WASTEWATER PUMP STATION

DOL CATEGORY 4

PROJECT No. SS12
DATE MICROFILMED
SHEET 2 OF 3
DRAWING No. 06-07-832E