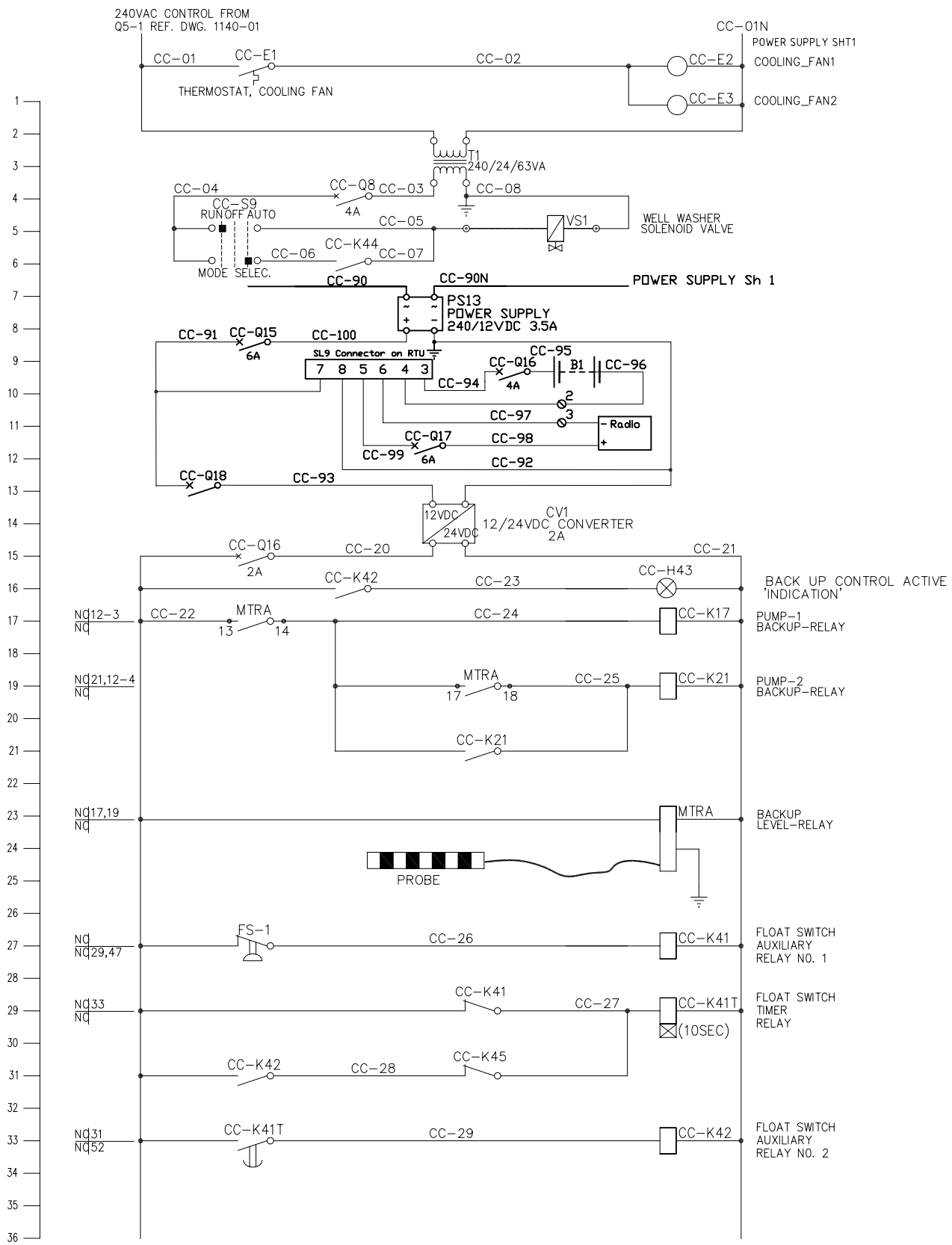

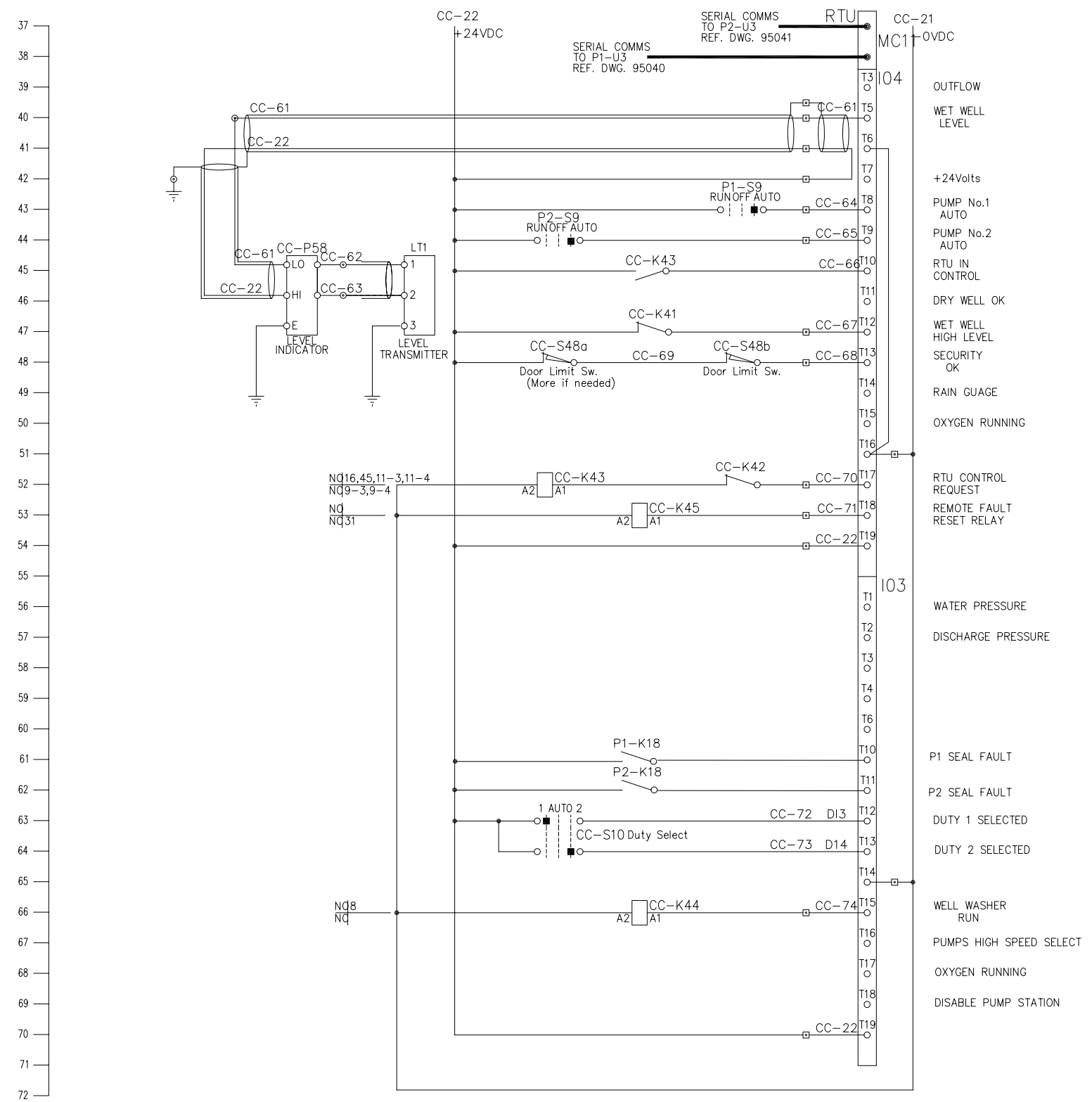

DRAWN BY: GoldCoastWater	PROJECT OFFICER	DESIGN NOT TO BE AMENDED WITHOUT REFERENCE TO DESIGN PROJECT OFFICER				BAR SCALES
	DESIGN/DRAWN LW/GLH					
	DWG CHKD	E	BATTERY WIRING CHANGED	LW	14/02/07	PROJECT FILE NAME G:BUS.REC./06-07-842
		D	AUTO SWITCH MODS,CC-43 CHANGES	LW	28/06/05	
	DES CHKD	C	CC-Q15 changed to 6A	LW	05/04/05	RECORDS FILE NO. / SURVEY FOLDER NO.
		B	DRAWING NUMBER WAS 03-07-812	LW	20/04/04	
TELEPHONE: (07) 5581 6661 / DATE	APPROVED	A	B1, CV1 ADDED, P1-S9, P2-S9 REVISED	GLH	07/03/04	SURVEYED BY / DATE / SURVEY CHKD
		No.	AMENDMENT		APPROVED	DO NOT SCALE, USE FIGURED DIMENSIONS ONLY

Gold Coast City Council — GOLD COAST CITY COUNCIL, PO BOX 5042, GOLD COAST MC 9729

GoldCoastWater

ACCEPTED

FOR PROJECT ENQUIRIES REFER ..... EXT ..... DATE

SCHEMATIC WIRING DIAGRAM WASTEWATER PUMP STATION

7 UP TO 22kW SOFT STARTING

PROJECT No.	SS12
DATE MICROFILMED	/ /
SHEET	2 OF 6
DRAWING No.	06-07-842E