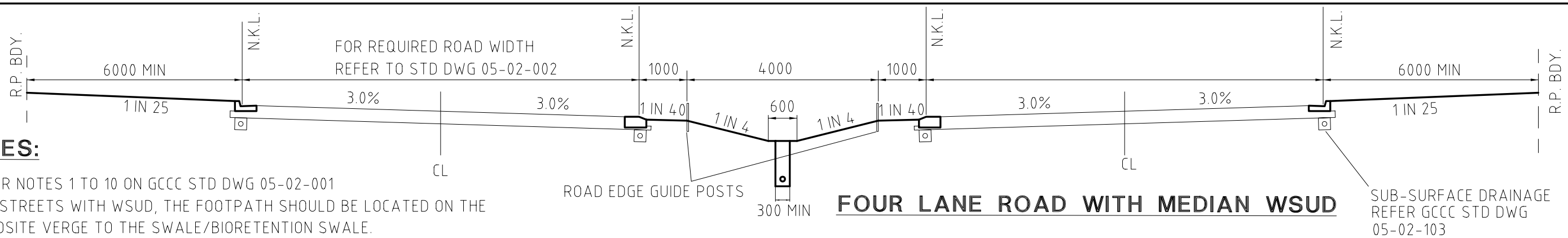

FOUR LANE ROAD WITH MEDIAN WSUD

NOTES:

1. REFER NOTES 1 TO 10 ON GCCC STD DWG 05-02-001
2. FOR STREETS WITH WSUD, THE FOOTPATH SHOULD BE LOCATED ON THE OPPOSITE VERGE TO THE SWALE/BIORETENTION SWALE.
3. REFER LAND DEVELOPMENT GUIDELINES 3.5, 13.3, 13.4 AND QUEENSLAND URBAN DRAINAGE MANUAL TO ENSURE FLOW DEPTH, WIDTH AND SAFETY REQUIREMENTS FOR MAJOR AND MINOR STORMS ARE MET. THE MINOR STORM IS TO BE CONTAINED WITHIN THE SWALE AND UNDERGROUND DRAINAGE. THE MAJOR STORM SHOULD BE KEPT IN THE ROAD RESERVE.
4. WSUD VERGES SHALL INCLUDE FEATURES THAT PREVENT DRIVING OR PARKING ON SWALES.
5. BOLLARDS MAY BE USED AS FOLLOWS :
   - 1000MM MIN HEIGHT
   - MAXIMUM CROSS SECTION 150x150MM
   - CONSIDER VISIBILITY IN COLOUR SELECTION
   - NOT RECOMMENDED FOR >50KM/HR STREETS
   - REFLECTORS IN ACCORDANCE WITH GCCC STD DWG 05-02-502
6. WSUD KERB TO BE CONSTRUCTED AS PER NOTES ON GCCC STD DWG 05-02-101

LEGEND:

R.P. BDY.	REAL PROPERTY BOUNDARY
N.K.L.	NOMINAL KERB LINE
MAX	NOT STEEPER THAN
MIN	NOT LESS THAN
U/G	UNDER GROUND

*	MIN TO FACE OF FRANGIBLE POLE REFER NOTE 9 ON GCCC STD DWG 05-02-005
**	FOR FEEDER CONNECTION - NOT DOMESTIC CONNECTION TO INDIVIDUAL LOTS
***	WIDTH WHERE RECYCLED/POTABLE WATER SUPPLY DUAL SYSTEM REQUIRED
****	FOR DOMESTIC CONNECTION TO INDIVIDUAL LOTS.

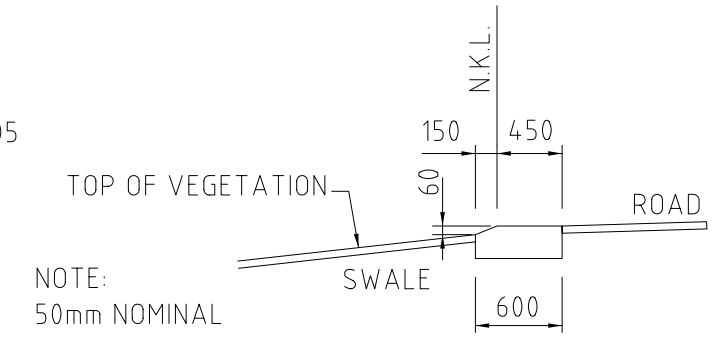

NOTE:
50mm NOMINAL HEIGHT OF VEGETATION

WSUD KERB

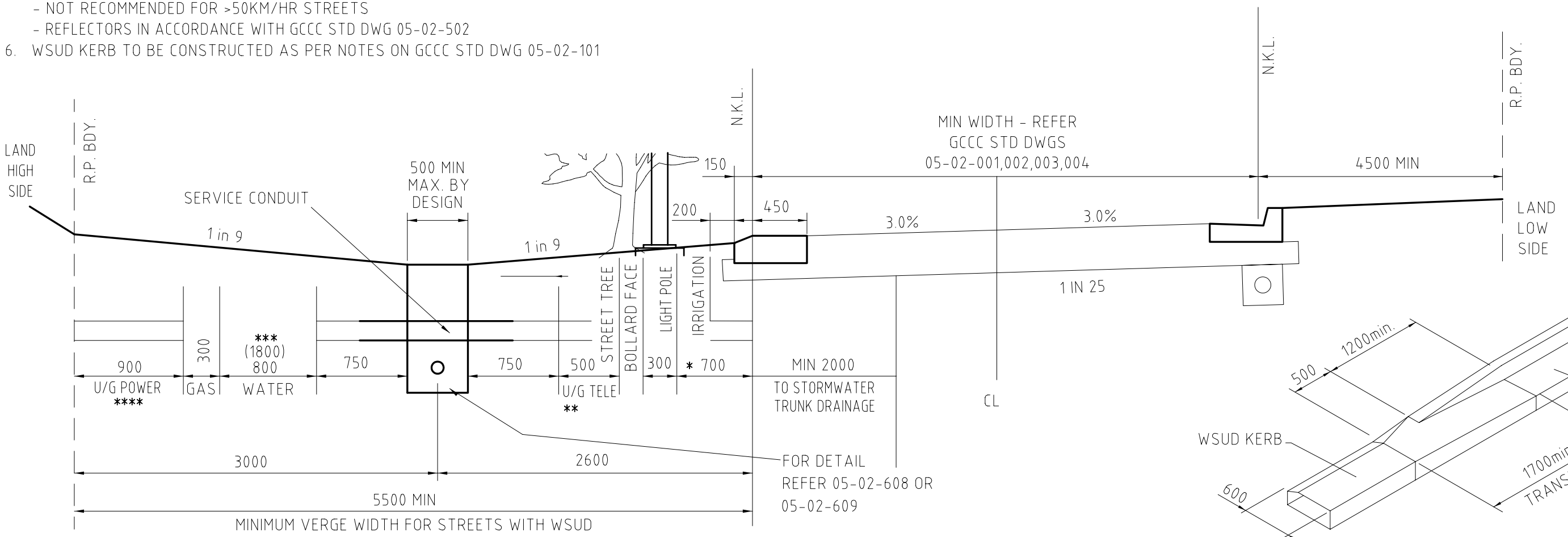

RESIDENTIAL STREET WITH WSUD VERGE

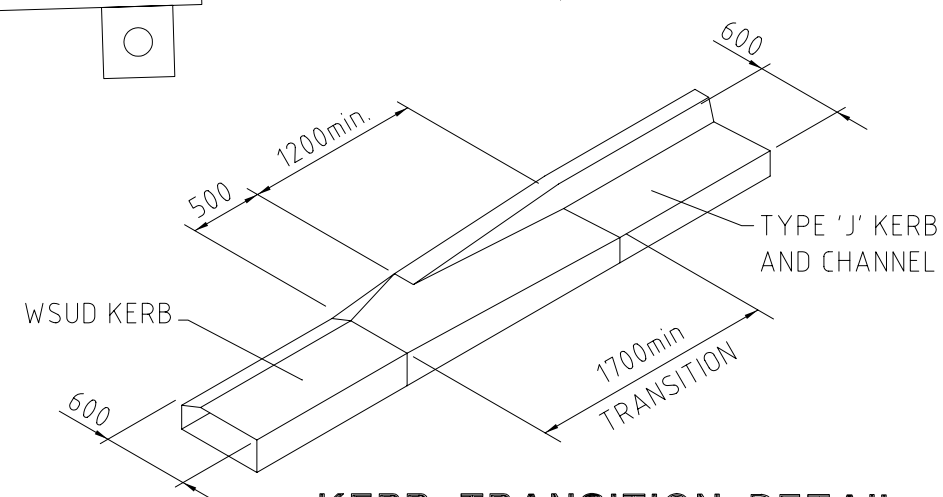

KERB TRANSITION DETAIL

THIS DRAWING IS NOT TO BE AMENDED WITHOUT REFERENCE TO STANDARDS COMMITTEE				CONTROLLED DOCUMENT
No.	AMENDMENT	APPROVED	DATE	ISSUED

DO NOT SCALE
TAKE FIGURED DIMENSIONS ONLY

DRAWN BY
TECHNICAL SERVICES BRANCH

PASSED / /

APPROVED / /

Gold Coast City Council
GOLD COAST CITY COUNCIL
PO BOX 5042
GOLD COAST MC 9729

STANDARD DRAWING

TYPICAL CROSS SECTION ROADS WITH WSUD

MICROFILMED

STANDARD DRAWING No.
05-02-007

ISSUE
2005 EDITION