TABLE OF DIMENSIONS

DIMENSION	LIFT STATION PUMP WELL	LIFT STATION DISCHARGE CHAMBER	PUMP STATION Ø2100 - Ø2400	3200 & 4000 PUMP STATION PUMP WELL	3200 & 4000 PUMP STATION DISCHARGE CHAMBER
A	1260	1000	1470	2220	2220
B	1240	980	1450	2200	2200
C	600	470	705	1080	1080
D	520	390	625	1000	1000
E	580	450	685	1060	1060
F	240	175	293	480	480
G	270	205	323	510	510
H	950	800	950	1620	970
J	930	780	930	1600	950
K	880	730	880	1550	900
L	440	365	440	775	450

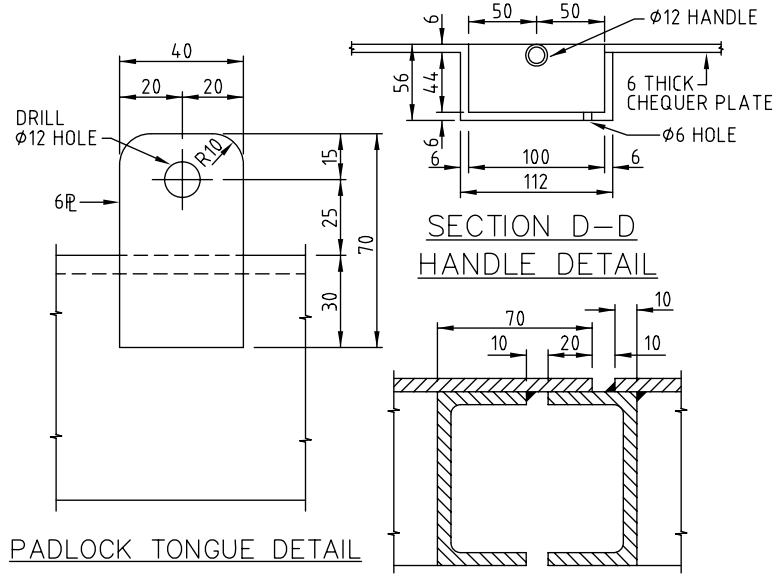

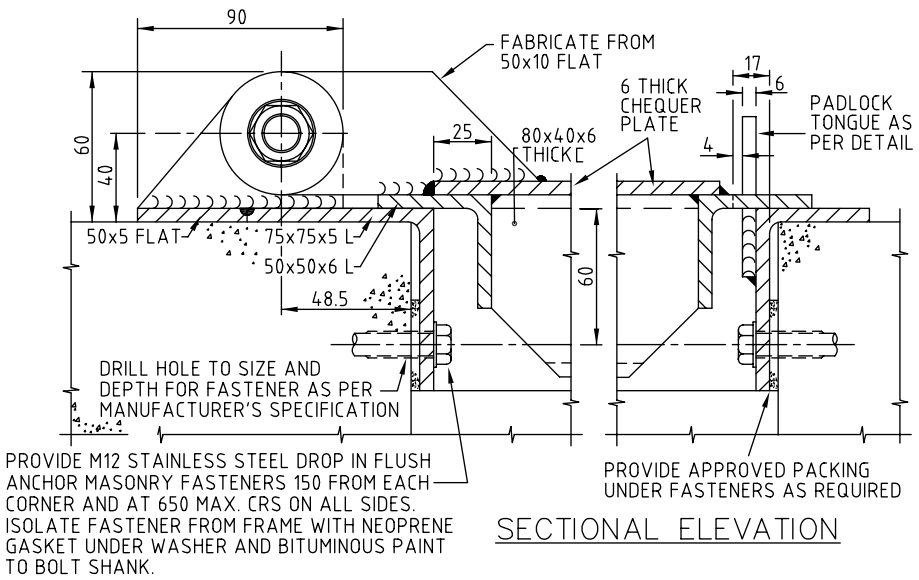

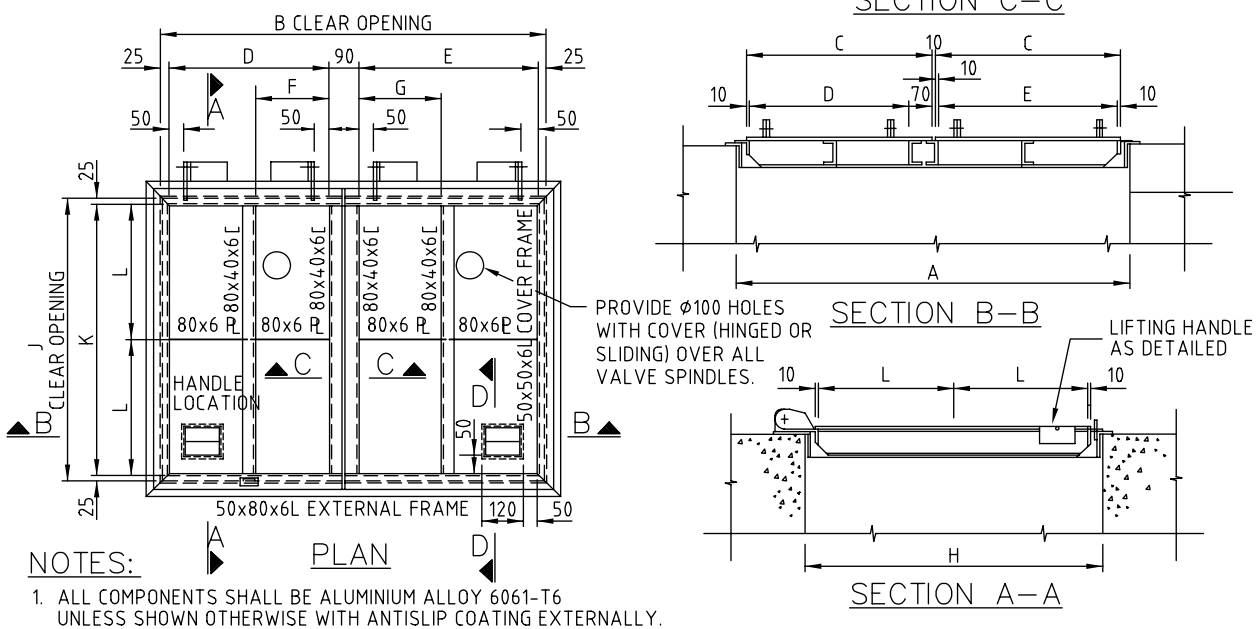

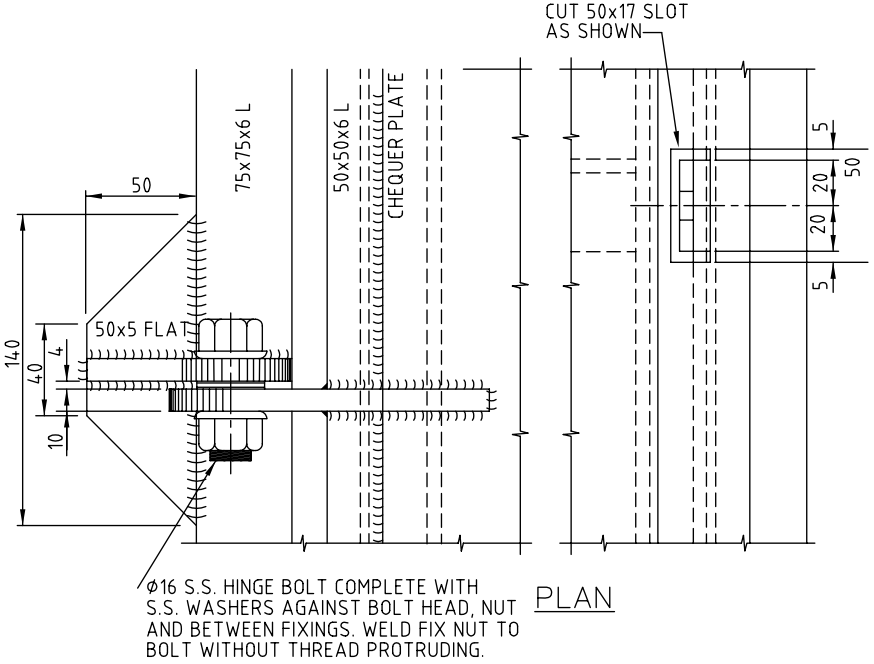

NOTES:

1. ALL COMPONENTS SHALL BE ALUMINIUM ALLOY 6061-T6 UNLESS SHOWN OTHERWISE WITH ANTISLIP COATING EXTERNALLY.
2. ALL CONNECTIONS SHALL BE WELDED WITH 6 CONTINUOUS FILLET OR FULL STRENGTH BUTT WELDS UNLESS SHOWN OTHERWISE.
3. ALL ALLOY FACES IN CONTACT WITH CONCRETE SHALL BE BITUMEN PAINTED.
4. 6 THICK CHEQUER PLATE OMITTED FOR CLARITY. WELD TO COVER FRAME WITH 3 CONTINUOUS FILLET ROUND TOP AND UNDERSIDE.
5. DIMENSIONS ARE IN MILLIMETRES UNLESS SHOWN OTHERWISE.

Gold Coast City Council

GOLD COAST CITY COUNCIL
PO BOX 5042
GOLD COAST MC 9729

THIS DRAWING IS NOT TO BE AMENDED WITHOUT REFERENCE TO STANDARDS COMMITTEE

CONTROLLED DOCUMENT

DO NOT SCALE
TAKE FIGURED DIMENSIONS ONLY

No.	AMENDMENT	APPROVED	DATE	ISSUED

DRAWN BY G.C.W
PASSED 08/07/08 D. HAYMAN
APPROVED 08/07/08 R. WENT

STANDARD DRAWING

LIGHT DUTY ACCESS COVER FOR SEWERAGE LIFT STATIONS AND PUMP STATIONS

MICROFILMED

STANDARD DRAWING No. 08–07–127

ISSUE 2008 EDITION